Emergency Kit

JUST E3 PLUG&PLAY KIT MANUALTEST LIFEPO4 96635766

Emergency LED driver

Emergency LED driver with Manual Test function and LiFePo4 battery for 3 hour emergency duration, including indicator LED and test switch. Enables quick and easy conversion of THORNeco luminaires for emergency operation. Compatible with Anna Vario, Amy Vario, Zoe Vario and Lily. The LiFePo4 battery incorporates trickle re-charging. This provides energy efficient charging, reduced operating temperatures and optimum service life of the battery. Battery compartment can be easily opened for a fast and convenient battery replacement. Rated supply voltage : 230V ;Supply frequency : 50/60Hz; Supply current (Max) : 50mA; Power factor : > 0.5; Output voltage: 10 to 55V; Output power: 3W; Rated emergency duration: 3 hours. Battery: LiFePo4 6,4V 2,2Ah; Initial charge period: 24 hours; Ambient temperature (ta) : 0°C to +50°C; weight: 0.47 kg.



TE_EMERGENCY_F_Just_E3_Kit_Gen2.jpg

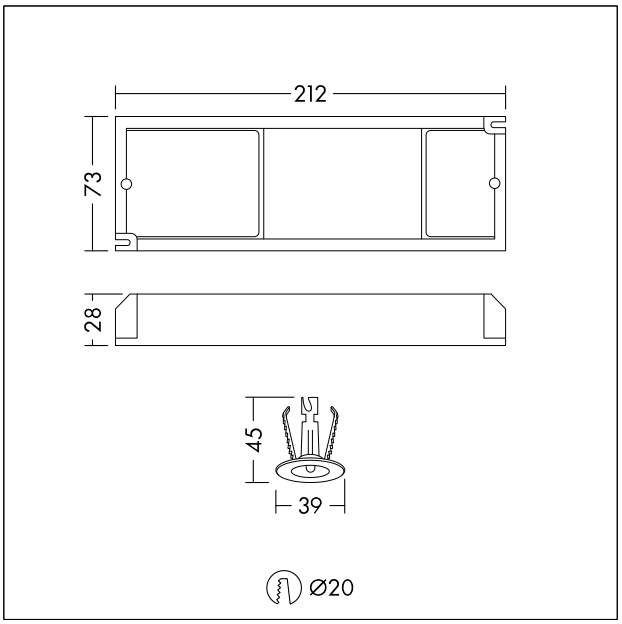

TE_JUSTEMERGENCY_M_GEN2.wmf

Light Distribution

All values marked with an * are rated values. Unless stated otherwise, the values apply to an ambient temperature of 25°C.