BORIS PLUG&PLAY E3 KIT 5.5W LiFePO4 96635569

IP65 LED high-bay luminaire E3 Kit

Plug&Play E3 kit including LiFePO4 battery for 3-hour emergency duration and indicator LED. Enables quick and easy conversion of the BORIS and BORIS FLEX high bay luminaires for emergency operation. Rated supply voltage : 230V; Supply frequency : 50/60Hz; Power factor: > 0.5; Output power: 5.5W; Rated emergency duration : 3 hours; Battery: LiFePO4 6.4V 6.6Ah; Initial charge period: 24 hours. Weight: 1.4 kg



TE_BORIS_F_PLUG-PLAY_E3_kit.jpg

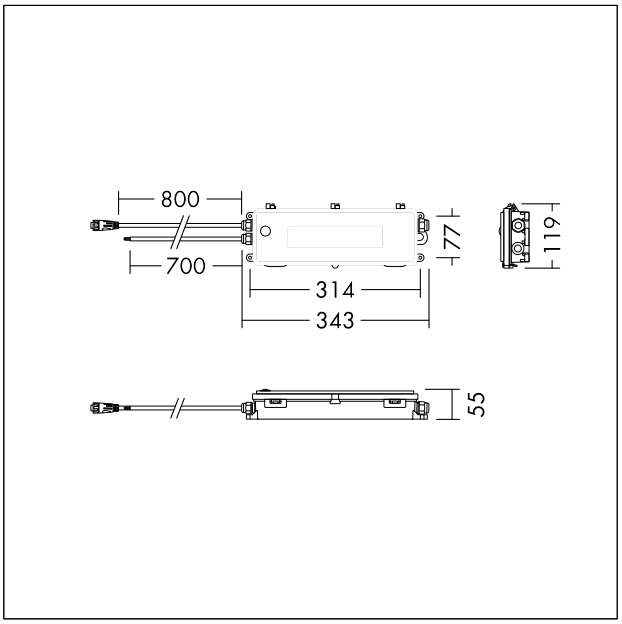

TE_BORIS_M_E3KIT.wmf

Light Distribution STD - standard

We reserve the right to make technical changes without prior notice. 21.02.2025 © ThornEco