BORIS PLUG&PLAY E3 KIT 96634425

IP65 LED high-bay luminaire E3 Kit

Plug&Play E3 kit with NiCd battery for 3-hour emergency duration and indicator LED. Enables quick and easy conversion of the Boris high bay luminaires for emergency operation. Rated supply voltage : 230V ;Supply frequency : 50/60Hz; Supply current (Max) : 30mA; Power factor : > 0.5; Output voltage: 10 to 50V;Output power: 4W; Rated emergency duration : 3 hours; Battery: NiCd 4,8V 4,5Ah; Initial charge period : 24 hours;Ambient temperature (ta) : 0°C to +25°C; weight: 1.4 kg



TE_BORIS_F_PLUG-PLAY_E3_kit.jpg

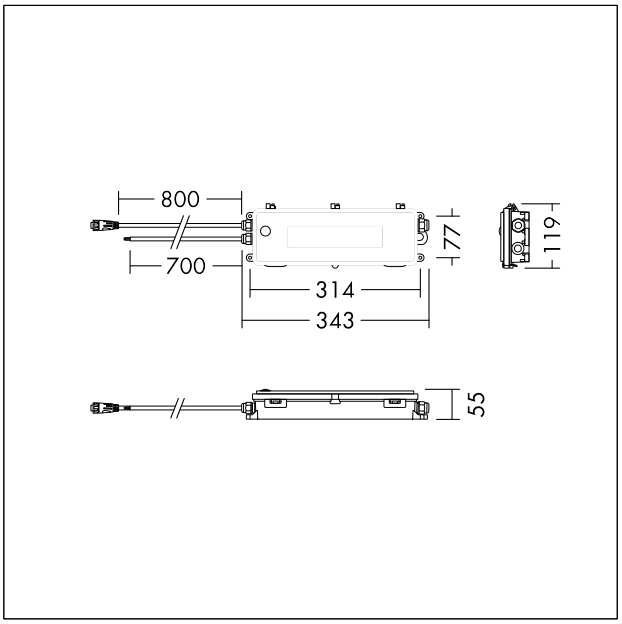

TE_BORIS_M_E3KIT.wmf

Light Distribution STD - standard

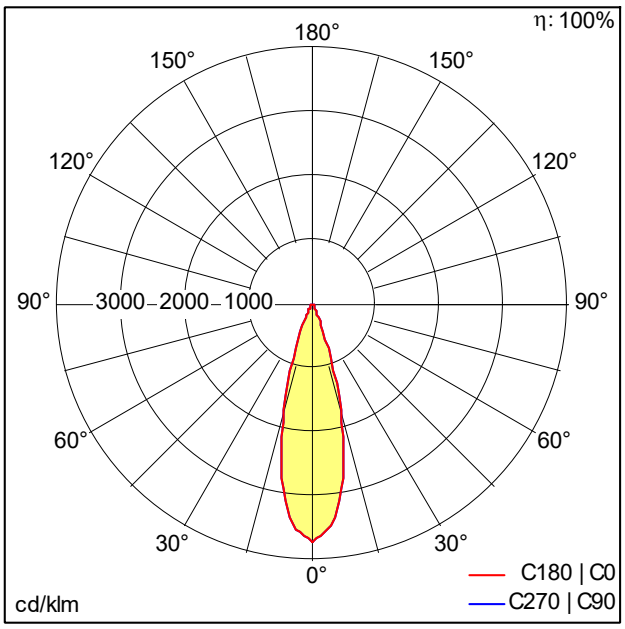

TE_BORIS_PLUG&PLAY_E3_KIT.ldt

- Light Source: LED
- Luminaire luminous flux*: 587 lm
- Luminaire efficacy*: 196 lm/W
- Colour Rendering Index min.: 80
- Correlated colour temperature*: 4000 Kelvin
- Chromaticity tolerance (initial MacAdam): 5
- Rated median useful life*:
  L80 50000 h at 25 °C
- Ballast: 1x LED_Con
- Luminaire input power*: 3 W
- Dimming: Fixed output

All values marked with an * are rated values. Connected electrical load and luminous flux are subject to an initial tolerance of +/- 10%, the most similar colour temperature is subject to an initial tolerance of +/- 150K. Unless stated otherwise, the values apply to an ambient temperature of 25°C.

IEC EN 60598-1 RG 1 | RoHS | UK CA | IP65 IK08 | 850°C | Ta 0 +25

We reserve the right to make technical changes without prior notice. 21.02.2025 © ThornEco